0800 80 90 98
www.technipharm.co.nz
1800 124 034
www.technipharm.com.au

Static calculation of a 4.5m high Ecobag filled with liquid

This document presents the forces which are applied on the embankment of a 4.5m high Ecobag by the stored liquid.

1. Data input material

The liquid is assumed to be water:
Volume weight liquid = 1000kg/m³ = 9.8 kN/m³

1kN/m²=1kPa

2. Situation drawing – geometry

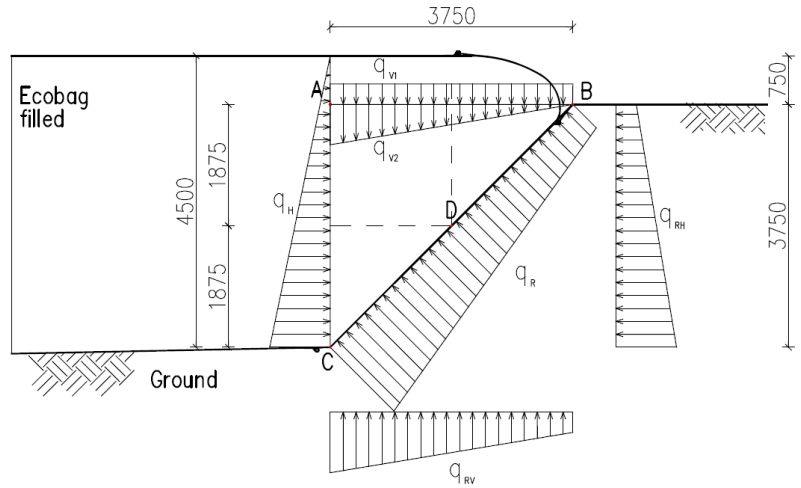

3. Load calculation:

$q_{V1} = 9.8 \text{ x } 0.75 = 7.35\ kN/m^2$

$q_{V2A} = 9.8 \text{ x } 3.75 = 36.75\ kN/m^2$

$q_{V2B} = 0\ kN/m^2$

$q_{V2D} = 9.8 \text{ x} \frac{3,75}{2} = 18.375\ kN/m^2$

$q_{HA} = 9.8 \text{ x } 0.75 = 7.35\ kN/m^2$

$q_{HC} = 9.8 \text{ x } 4.5 = 44.1\ kN/m^2$

$q_{HD} = 9.8 \text{ x } 2.625 = 25.725\ kN/m^2$

4. Reactions calculation:

$$q_{RVA} = q_{V1} + q_{V2A} = 7.35 + 36.75 = 44.1\ kN/m^2$$

$$q_{RVB} = q_{V1} = 7.35\ kN/m^2$$

$$q_{RHB} = q_{HA} = 7.35\ kN/m^2$$

$$q_{RHC} = q_{HC} = 44.1\ kN/m^2$$

$$q_{RVD} = q_{V1} + q_{V2D} = 7.35 + 18.375 = 25.725\ kN/m^2$$

$$q_{RHD} = q_{HD} = 25.725\ kN/m^2$$

$$\boxed{\begin{aligned} q_{RC} &= \sqrt{{q_{RHC}}^2 + {q_{RVA}}^2} = \sqrt{44.1^2 + 44.1^2} = 62.4\ kN/m^2 \\ q_{RB} &= \sqrt{{q_{RVB}}^2 + {q_{RHB}}^2} = \sqrt{7.35^2 + 7.35^2} = 10.4\ kN/m^2 \\ q_{RD} &= \sqrt{{q_{RVD}}^2 + {q_{RHD}}^2} = \sqrt{25.725^2 + 25.725^2} = 36.4\ kN/m^2 \end{aligned}}$$